ViO35-6A

QUICK SPECS

Weight	7,905 lbs
Horsepower	24.4 hp
Digging Depth	11'3"

The most advanced excavator we've ever made.

Introducing the most innovative, fuel-efficient excavator we've ever built. The advanced technology zero tail swing ViO35-6A features an electronically controlled Tier 4 engine that meets emissions regulations without the need for a diesel particulate filter. It also comes standard with ECO and Auto-Deceleration modes for even more operational efficiency, which means the new ViO35-6A can now deliver up to 20% less fuel consumption than previous models. The Yanmar ViO35-6A is the most productive digging, lifting, do-anything excavator you can buy.

- POWERFUL, EFFICIENT ELECTRONICALLY CONTROLLED 24.4 HP TIER 4 DIESEL ENGINE
- ECO & AUTO-DECELERATION MODE STANDARD
- JOYSTICK PILOT CONTROLS WITH CONTROL PATTERN CHANGE STANDARD
- AUXILIARY HYDRAULICS W/ PROPORTIONAL CONTROL STANDARD
- 2-SPEED DRIVE CONTROL STANDARD
- OPTIONAL ENCLOSED CAB WITH HEAT & A/C
- OPTIONAL SMARTASSIST REMOTE AND GPS SYSTEM
- RUBBER TRACKS STANDARD; STEEL TRACKS OPTIONAL

INNOVATIVE FEATURES

Advanced Operation Control System

The new digital Smart Assist control system allows you to monitor up to three months of operational history. Because this state-of-the-art system centralizes control of machine operation information and maintenance support information, it's never been easier to maintain a timely, efficient service process.

Quick Coupler System

The standard hydraulic Quick Coupler makes changing buckets fast and easy. With the exception of fitting and removing the safety lock pin, the entire operation is performed electronically while you're seated in the comfort of the cab. Less hassle, less downtime, more productivity!

Easier To Service Than Your Car

The innovative design puts virtually every major component – engine, hydraulic system, starter, generator, battery – right at your fingertips. Because routine filter and grease fitting checks are easier and quicker, you can perform them more often, extending the life of and improving the durability of your machine.

Vi035-6A

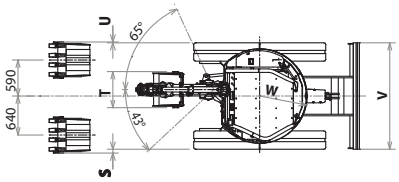

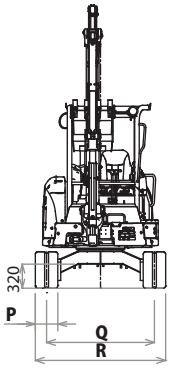

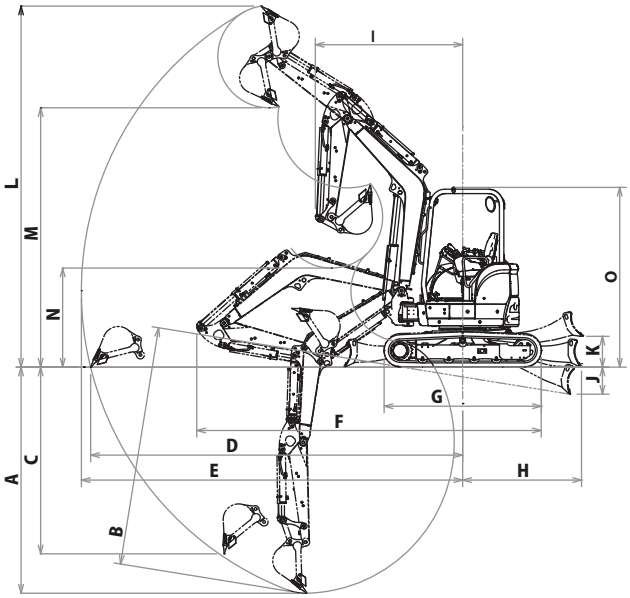

Dimensions - Vi035-6A - Rubber Track

A 10 ft. 8 in. (3,250 mm)
B 11 ft. 3 in. (3,440 mm)
C 7 ft. 11 in. (2,410 mm)
D 17 ft. 3 in. (5,270 mm)
E 17 ft. 8 in. (5,390 mm)
F 15 ft. 8 in. (4,770 mm)
G 7 ft. 1 in. (2,160 mm)
H 5 ft. 4 in. (1,630 mm)
I 7 ft. 1 in. (2,170 mm)
J 1 ft. 3 in. (370 mm)
K 1 ft. 5 in. (425 mm)
L 16 ft. 9 in. (5,110 mm)
M 11 ft. 2 in. (3,410 mm)
N 4 ft. 1 in. (1,240 mm)
O 8 ft. 1 in. (2,470 mm)
P 1 ft. (300 mm)
Q 4 ft. 9 in. (1,440 mm)
R 5 ft. 9 in. (1,740 mm)
S 2.6 in. (65 mm)
T 1 ft. 11 in. (590 mm)
U 0.6 in. (15 mm)
V 5 ft. 9 in. (1,740 mm)
W 2 ft. 7 in. (775 mm)

Specifications

Model			Vi035-6A	
Type			Canopy	Cabin
Operating Weight	Rubber track	lbs (kg)	7905 (3585)	8214 (3725)
	Steel track	lbs (kg)	8125 (368	8434 (3825)
Engine	Type	-	Water-cooled 4-cycle diesel	
	Model	-	3TNV88F-ESBV	
	Rated Output	HP (kW)/rpm	24.4 (18.2) / 2200	
Performance	Max Digging Force, Bucket / Arm	lbs (kN)	w/ QC - 5643 (25.1): w/o QC - 7216 (32.1)	
	Traveling Speed, High / Low	MPH (km / h)	2.7 (4.5) / 1.6 (2.7)	
	Swing Speed	RPM	9.5	
	Boom Swing Angle, (L / R)	degrees	43 / 65	
Ground Contact Pressure (Rubber Track)		PSI (kPa)	4.80 (33.1)	4.97 (34.3)
Hydraulic System	Pump Capacity	GPM (L / min)	9.8 (37.0)x2 <Variable displacement pump> 6.9 (26.2)x1, 2.9 (10.8)x1 <Gear pump>	
	Main Relief Set Pressure	PSI (MPa)	3205 (22.1)x2, 3133 (21.6)x1	
Blade Dimensions	Width	ft-in (mm)	5' 8" (1740)	
	Stroke, Raise / Lower from G.L.	ft-in (mm)	1' 5" (425) / 1' 3" (370)	
Fuel tank capacity		Gals (L)	10.8 (41)	

Hydraulic PTO

Model / Output / Specification	Vi035-6A		
	PSI (MPa)	GPM (L / min)	
		2200RPM	1100RPM
Combined Flow, Double Actions	3205 (22.1)	16.7 (63.2)	8.35 (31.6)

Standard Equipment

Hydraulic Quick Coupler*
Backfill Dozer Blade
Boom Swing Function
Rubber Track / Steel Track
Auxiliary Valve and Plumbing
Back Mirror
2-way Control Pattern Change
ROPS / OPG Canopy, Cabin
Windshield Washer
Joystick Pilot Controls
Arm Rests (Adjustable)
Suspension and Reclining Seat
Seat Belt
Proportional Auxiliary Hydraulics Control
Travel Automatic
Dual Speed Switch
Auto Deceleration Switch
Eco Mode Switch
Engine Stop Switch
Traveling Alarm
Floor Mats

**Also available without Quick Coupler.*

Please note that the standard equipment may vary from this list. Consult your Yanmar dealer for confirmation.

Lifting Capacity

LIFT POINT HEIGHT h:in (mm)		r:REACH in (mm)											
		RATED LIFT CAPACITY OVER END BLADE DOWN lbs (kg)				RATED LIFT CAPACITY OVER END BLADE UP lbs (kg)				RATED LIFT CAPACITY OVER SIDE BLADE UP lbs (kg)			
		MAX	137.8(3500)	118.1(3000)	98.5(2500)	MAX	137.8(3500)	118.1(3000)	98.5(2500)	MAX	137.8(3500)	118.1(3000)	98.5(2500)
118.1	(3000)	*1719(780)	*1631(740)	*1609(730)		1058(480)	1322(600)	*1565(710)		992(450)	1278(580)	*1565(710)	
78.7	(2000)	*1763(800)	*1918(870)	*2138(970)	*2491(1130)	903(410)	1278(580)	1653(750)	*2447(1110)	815(370)	1256(570)	1543(700)	*2447(1110)
39.4	(1000)	*1807(820)	*2336(1060)	*2888(1310)	*3813(1730)	793(360)	1190(540)	1521(690)	1984(900)	749(340)	1124(510)	1410(640)	1807(820)
Ground	(0)	*1873(850)	*2601(1180)	*3218(1460)	*4012(1820)	815(370)	1124(510)	1410(640)	1873(850)	793(360)	1058(480)	1322(600)	1719(780)
-39.4	(-1000)	*1940(880)	*2403(1090)	*2954(1340)	*3703(1680)	925(420)	1080(490)	1388(630)	1851(840)	881(400)	1014(460)	1322(600)	1675(760)
-59.1	(-1500)	*1918(870)	*2050(930)	*2579(1170)	*3130(1420)	1124(510)	1080(490)	1410(640)	1851(840)	1058(480)	1058(480)	1344(610)	1675(760)
-78.7	(-2000)	*1851(840)				1477(670)				1410(640)			

o : h m imum lo ds m rk d i h n s rrisk (*) r limi d b h ros h dr uli li ing i r h r h to iss i ld d(i ing o d) i .

© 2015 Yanmar America Corp. / CE-Vi0356A-E-1015

YANMAR